metalform
METAL FORM MANUFACTURING CO., INC
5960 WEST WASHINGTON STREET
PHOENIX, ARIZONA 85043
TELEPHONE: 602-233-1211 FAX: 602-233-2033
WEBSITE ADDRESS: WWW.MFMCA.COM

Model MFX-88 Security Grille

Primed Steel

Specifications

Frame:	2 3/32” deep steel core.
Grille:	16ga. steel plate.
Finish:	One coat MFM prime.
Minimum size:	6”w x 6”h.
Maximum size:	48”w x 48”h.

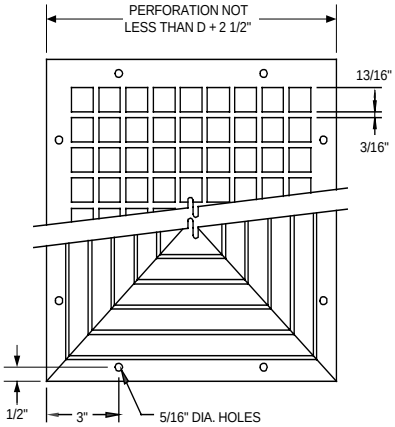

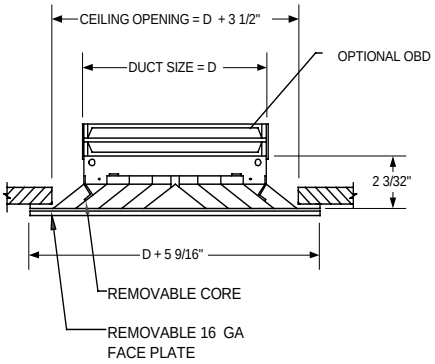

Options

-Flange size.
-Grilles - Many variations of grilles are available , consult factory.
-Damper.
-Finishes.

Notes

1. Width x height are nominal opening dimensions. Unless specified otherwise, units will be constructed 1/4” less.
2. Metal Form reserves the right to improve design or change specifications at any time.

Tag	Qty.	Width	Height	Length	Options	Finishes/Specify	Remarks

Project: _____
Architect: _____
Engineer: _____
Contractor: _____

©1998 Metal Form Manufacturing Co., Inc.
Form No. X-8898