METAL FORM MANUFACTURING CO., INC
5960 WEST WASHINGTON STREET
PHOENIX, ARIZONA 85043
TELEPHONE: 602-233-1211 FAX: 602-233-2033
WEBSITE ADDRESS: WWW.MFMCA.COM

Model MFS-40 Counterbalanced Backdraft Damper

Aluminum

Specifications

Frame:	.060” 6063-T5 Extruded aluminum.
Blades:	.032” Formed aluminum blades.
Bearings:	Nylon.
Axles:	3/16” Diameter celcon.
Seals:	PVC or Neoprene.
Counterbalance:	As required for up-flow, down-flow, or horizontal airflow applications. (Non - adjustable)
Max. Velocity:	1500 FPM @ 1” w.g.
Minimum size:	6” x 6”
Maximum size:	30”w x 30”h. Multiple section - unlimited size.

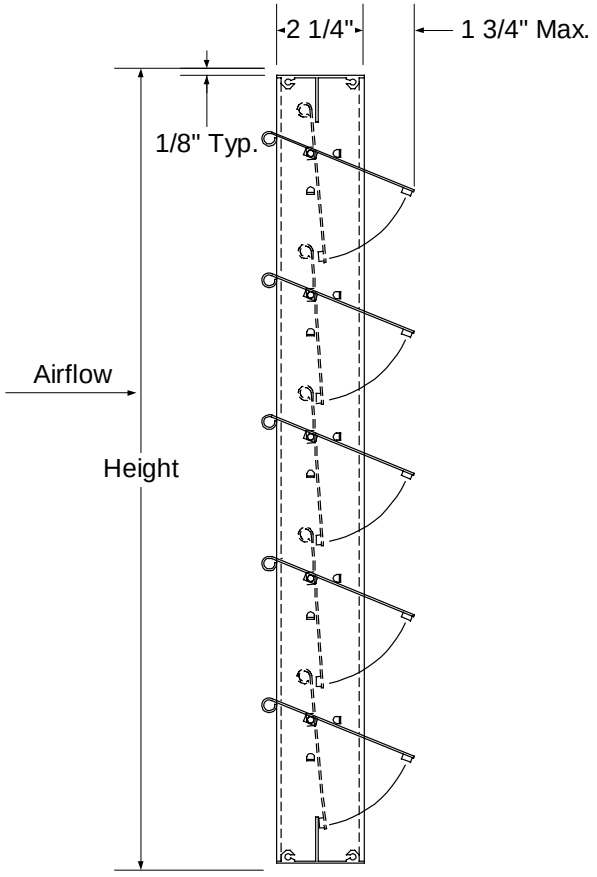

Section View

Options

-Flanged frame.
-Sleeves.

Notes

1. Width x height are nominal opening dimensions. Unless specified otherwise, units will be constructed 1/4” undersize.
2. Metal Form reserves the right to improve design or change specifications at any time.

Tag	Qty.	Width	Height	No. of Panels (W x H)	Options	Finishes/Specify	Remarks

Project: _____
Architect: _____
Engineer: _____
Contractor: _____

©1998 Metal Form Manufacturing Co., Inc.
Form No. S-4098