METAL FORM MANUFACTURING CO., INC
5960 WEST WASHINGTON STREET
PHOENIX, ARIZONA 85043
TELEPHONE: 602-233-1211 FAX: 602-233-2033
WEBSITE ADDRESS: WWW.MFMCA.COM

Model MFL-29 Fabricated Adjustable Louver

6” Deep Plain Blade

Specifications

Frame:	18ga. galvanized steel channel frame.
Blades:	18ga. galvanized steel.
Bearings:	Molded nylon.
Axles:	7/16” hex plated steel.
Linkage:	Heavy duty plated steel concealed in frame.
Screen:	1/2” x 1/2” x 19ga. galvanized steel.
Finish:	Standard mill.
Minimum size:	12”w x 12”h.
Maximum size:	60”w x 96”h. Multiple section - unlimited size.

Options

-Flanged frame.
-Blade seals.
-Stainless steel side seals.
-Sill extension.
-Sleeves.
-Sub frame (requires flanged louver).
-Screens - Many variations of screens are available , consult factory.
-Finishes - Many types of finishes are available, consult factory.
-Other options are available, consult factory.

Notes

1. Width x height are nominal opening dimensions. Unless specified otherwise, units will be constructed 1/4” undersize.
2. Metal Form reserves the right to improve design or change specifications at any time.

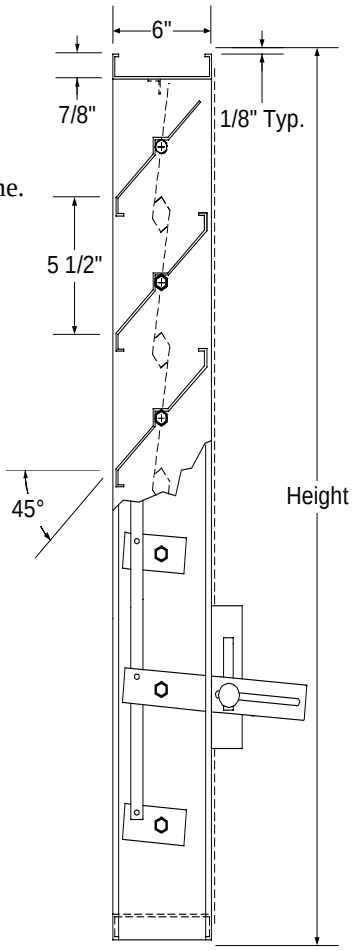

Section View

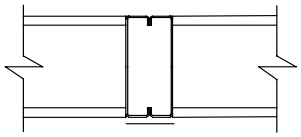

Mullion Detail

Optional Flanged Frame

Tag	Qty.	Width	Height	No. of Panels (W x H)	Options	Finishes/Specify	Remarks

Project: _____
Architect: _____
Engineer: _____
Contractor: _____

©1998 Metal Form Manufacturing Co., Inc.
Form No. L-2998