METAL FORM MANUFACTURING CO., INC
5960 WEST WASHINGTON STREET
PHOENIX, ARIZONA 85043
TELEPHONE: 602-233-1211 FAX: 602-233-2033
WEBSITE ADDRESS: WWW.MFMCA.COM

Model MFD-35 Single Blade Economy Damper

Galvanized Steel

Specifications

Frame:	Rollformed 16ga Galvanized steel hat channel frame.
Blades:	20ga. Galvanized steel.
Axles:	1/4” x 1/4” Plated steel.
Control Rod:	1/4” dia. x 2” long plated steel.
Quadrant:	Heavy gauge plated steel with locking wingnut.
Max. Velocity:	1500 FPM @ 1” w.g.
Minimum size:	4”w x 6”h.
Maximum size:	36”w x 12”h.

Options

-No options available.

Notes

1. Width x height are nominal opening dimensions. Unless specified otherwise, units will be constructed 1/4” undersize.
2. Metal Form reserves the right to improve design or change specifications at any time.

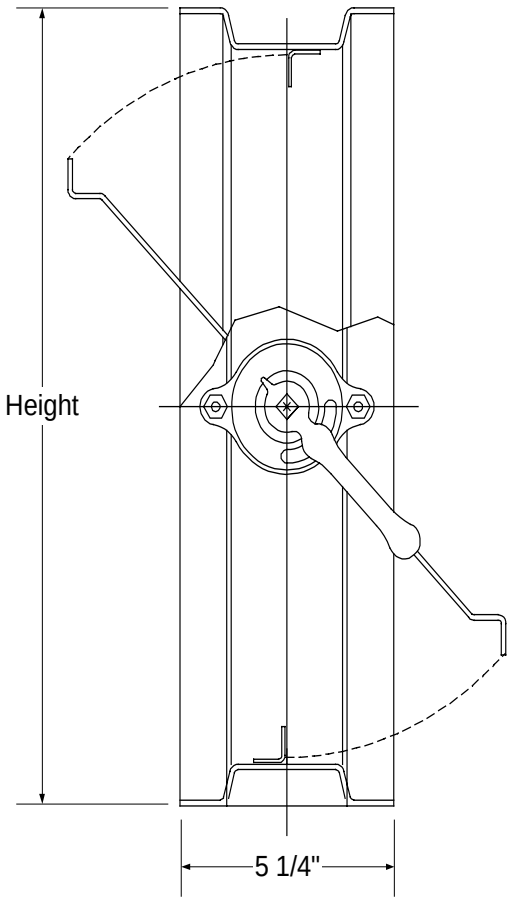

Section View

Tag	Qty.	Width	Height	Remarks

Project: _____
Architect: _____
Engineer: _____
Contractor: _____

©2000 Metal Form Manufacturing Co., Inc.
Form No. D-3500