METAL FORM MANUFACTURING CO., INC
5960 WEST WASHINGTON STREET
PHOENIX, ARIZONA 85043
TELEPHONE: 602-233-1211 FAX: 602-233-2033
WEBSITE ADDRESS: WWW.MFMCA.COM

Model MFB-54 Roof Curb Acoustical

Galvanized Steel

Specifications

Shell:	18ga. galvanized steel with continuously welded seams.
Finish:	Standard mill.
Minimum size:	12”w x 12”l x 6”h.
Maximum size:	Unlimited size.

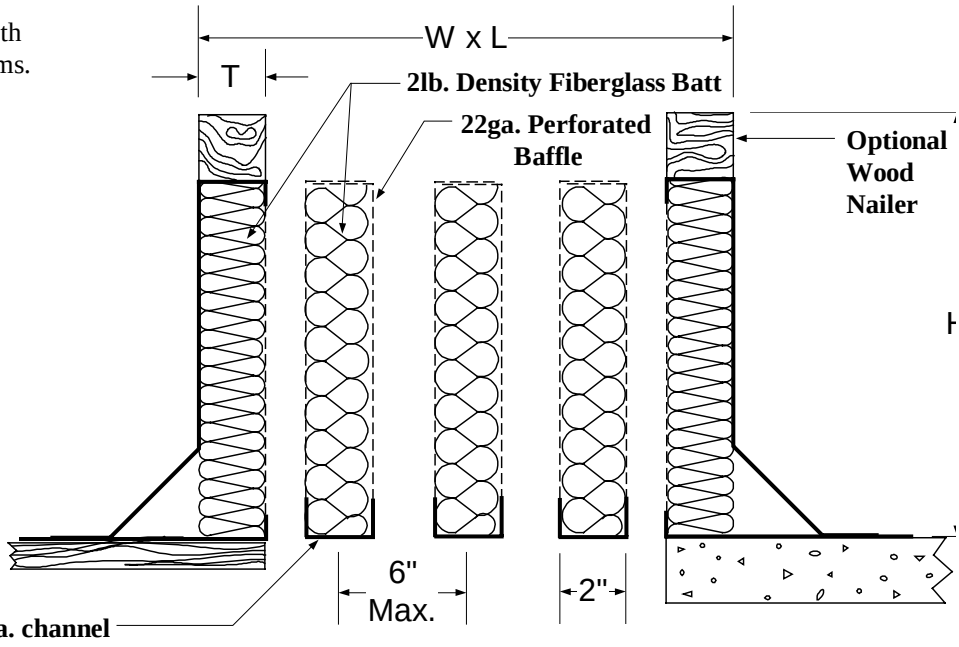

Options

-Wood nailer.
-Liner.
-One way pitch.
-Two way pitch.
-Water diverter.
-3 1/2” or 5 1/2” “T” dimension.

Notes

1. Width x length are curb O.D. dimensions.
2. Acoustical baffles are available on any style roof curb, please specify style when ordering.
3. “T” dimension available in 1 1/2”, 3 1/2”, 5 1/2” widths. Unless specified otherwise, standard “T” dimension is 1 1/2”.
4. Metal Form reserves the right to improve design or change specifications at any time.

Tag	Qty.	Width	Length	Height	T	Options	Remarks

Project: _____
Architect: _____
Engineer: _____
Contractor: _____

©1998 Metal Form Manufacturing Co., Inc.
Form No. B-5498.