METAL FORM MANUFACTURING CO., INC
5960 WEST WASHINGTON STREET
PHOENIX, ARIZONA 85043
TELEPHONE: 602-233-1211 FAX: 602-233-2033
WEBSITE ADDRESS: WWW.MFMCA.COM

Model MFD-36MBP Multi-Blade Parallel Round Control Damper

Steel

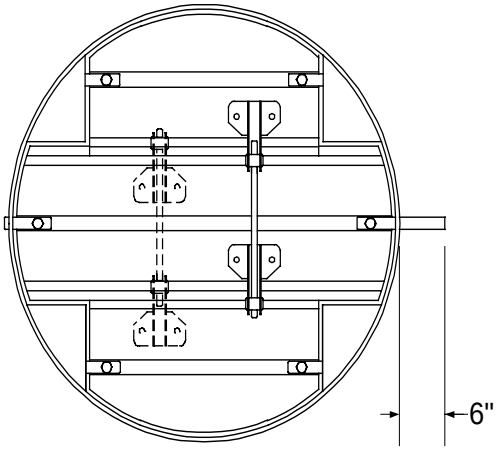

Specifications

Frame:	10ga. Galvanized rolled steel, 17” thru 20”. 3/16” x 2” H.R. bar, 21” and above.
Blades:	16ga. Galvanized steel with v-groove reinforcements.
Bearings:	Self-lubricating bronze.
Axles:	Corrosion resistant 1/2” die-cast zinc.
Linkage:	Plated steel brackets, brass pivots, 1/4” dia. linkage rod.
Control Rod:	1/2” dia. x 6” long plated steel.
Max. Velocity:	2000 FPM @ 4” w.g.
Minimum size:	17” Diameter.
Maximum single section:	48” Diameter. Multiple section - unlimited size.

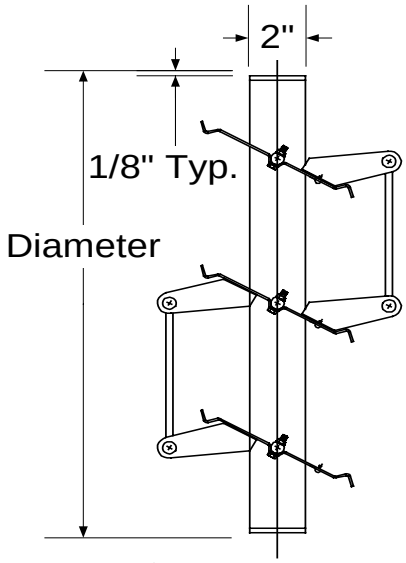

Section View

Options

- -Flanged frame.
- -Blade edge seals.
- -Operators.
- -Sleeves.
- -Various materials and gauges are available, consult factory.
- -Other options are available, consult factory.

Notes

1. Diameter is nominal opening dimension. Unless specified otherwise, units will be constructed 1/4” undersize.
2. Metal Form reserves the right to improve design or change specifications at any time.

Tag	Qty.	Dia.	No. of Panels(W x H)	Options	Finishes/Specify	Remarks

Project: _____

Architect: _____

Engineer: _____

Contractor: _____

©1998 Metal Form Manufacturing Co., Inc.
Form No. D-36MBP98